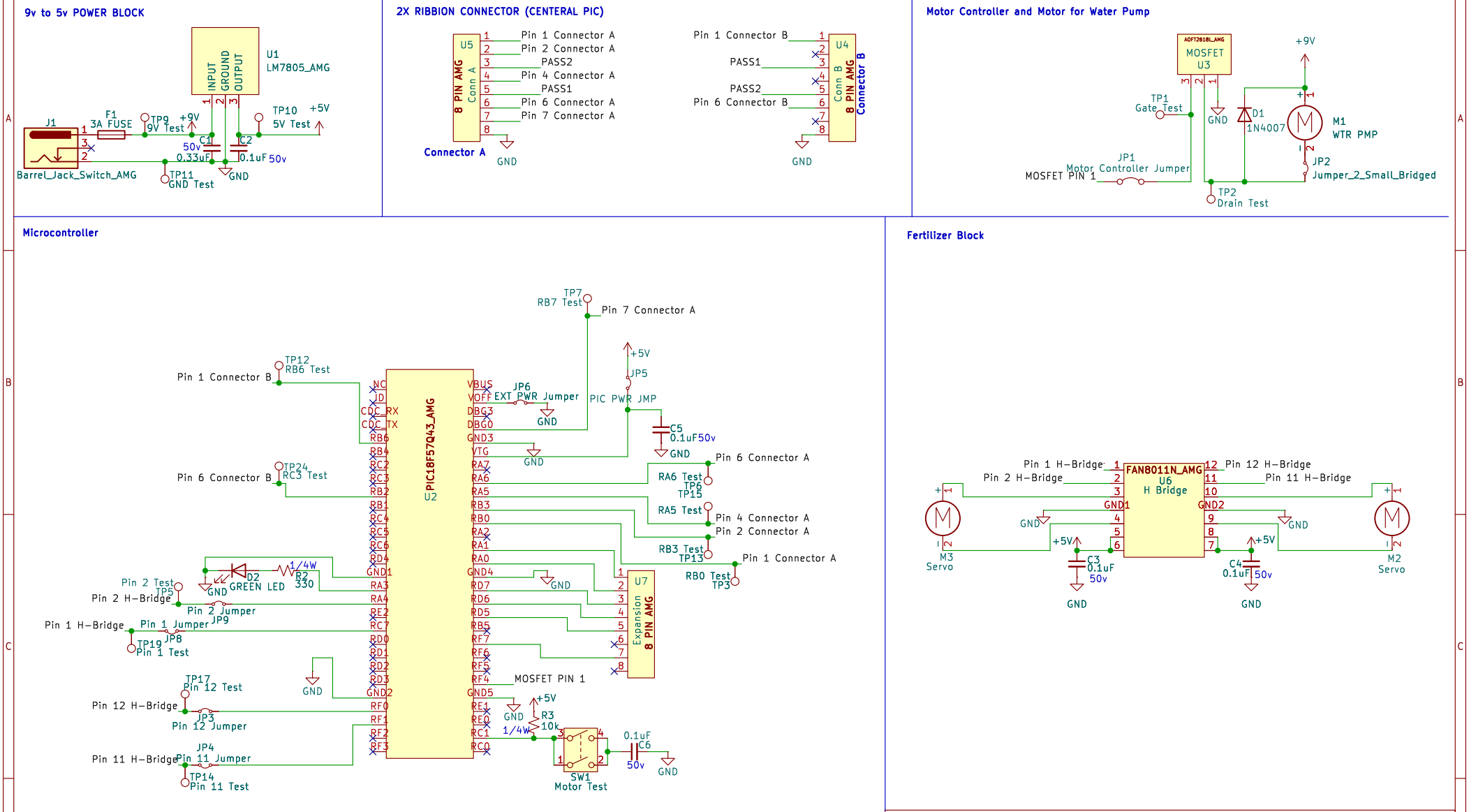

TEAM 102 9AM

Sheet: /

File: project schematic.kicad_sch

Title: CENTERAL PIC CONTROLLER W/ WATER PUMP CONTROLLER

Size: A4	Date: 2025-10-25	Rev: 4
KiCad E.D.A. 9.0.4		Id: 1/1